PRODUCT SHEET

Description:
Cushion "H" F/ZA Clamp "Square BT", Glass 10,76mm (3,42mm), Black EPDM

Item number:
22.10.692-9

Units	Box	Carton	HS Code	Barcode
Pcs.	100	2000	4016930090	5704866486040

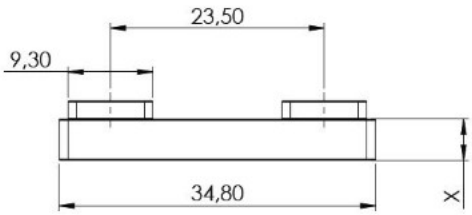

Hardness Shore A = 65 +/

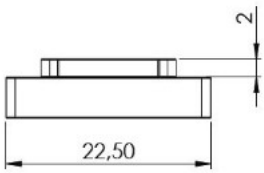

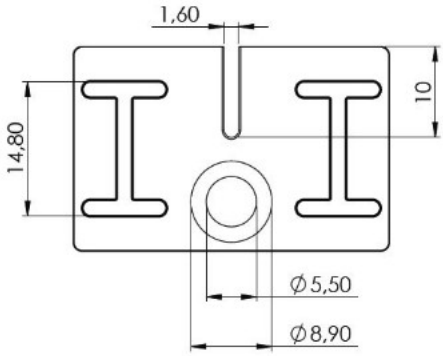

SISO A/S
Mileparken 11
DK-2740 Skovlunde
Denmark
VAT: DK 24786013

Phone +45 45 830 900

www.siso.dk
siso@siso.dk

Danske Bank
Nytorv Branch
Copenhagen
SWIFT: DABADKKK

Account no.
4180 3112 112936
IBAN Account
DK7230003112112936